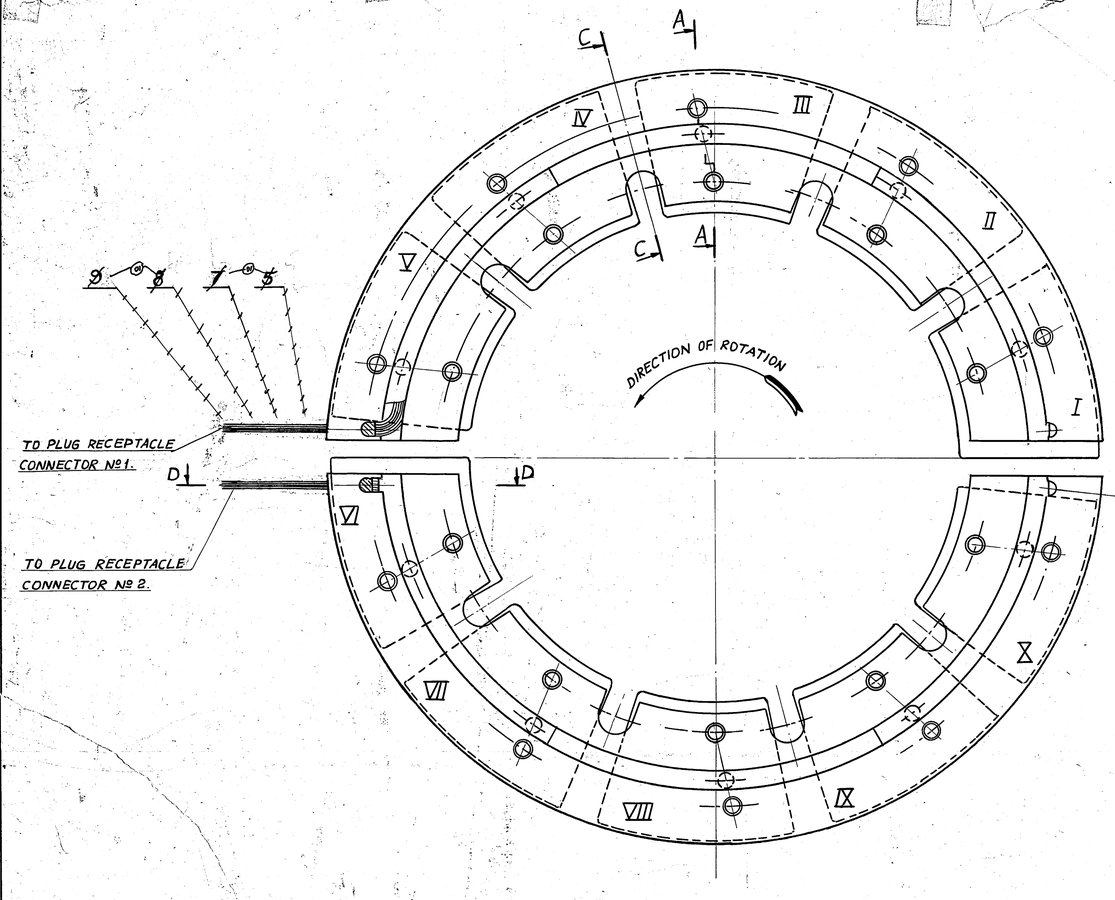


## SECTION A-A
SCALE 1:1

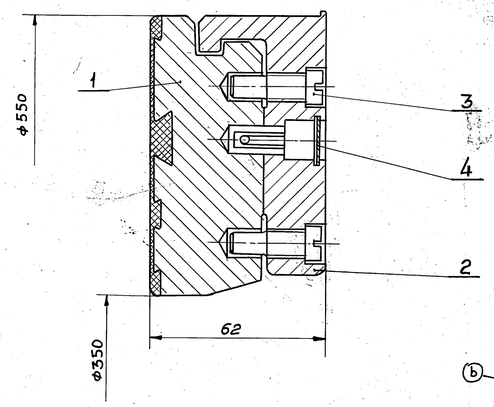


## TECH. REQUIREMENTS:-

1. OUT OF 11 PADS ONE PAD IS SPARE FOR ANY REJECTION DURING PRODUCTION.
2. PADS SHALL BE GIVEN SERIAL NUMBERS STARTING FROM HORIZONTAL JOINT IN THE DIRECTION OF ROTATION.
3. FIX THE THERMOMETERS IN THE PADS WITH ARYLDITE.
4. LENGTH OF THE CORDS OF THERMOMETERS SHALL BE DECIDED AT SITE.

(b) NOTE:- ITEM NO.16 TO BE USED IN PLACE OF ITEM NO.6 FOR ALL SETS AFTER SET NO.49 i.e METTUR-I OWNWARDS. FOR SET NO.49 AND EARLIER SETS ITEM NO.6 HOLDS GOOD.

## SECTION C-C
(TURNED)
SCALE 1:1

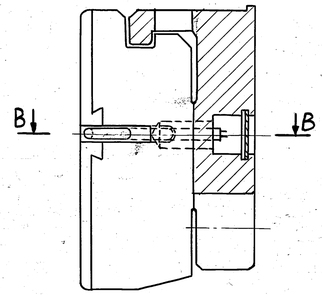


## CONNECTION DIAGRAM OF RESISTANCE THERMOMETERS EXTENSION LEADS.

UPPER HALF

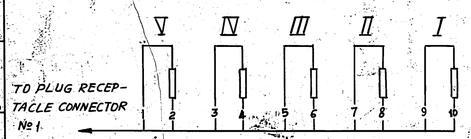


LOWER HALF

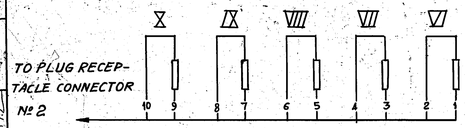


## SECTION D-D
SCALE 1:1

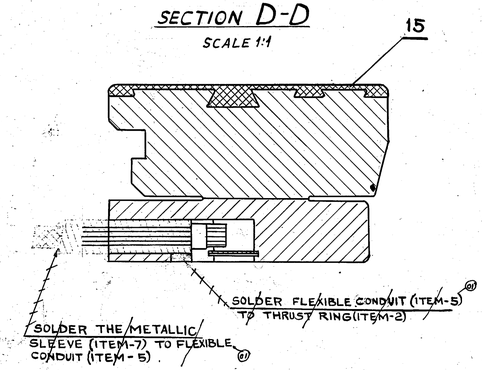


## SECTION B-B
SCALE 1:1

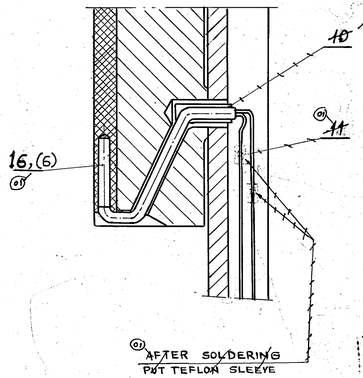


| ZONE | ITEM No | DESIGNATION | DESCRIPTION | QTY | PER PIECE | TOTAL WT. IN Kg. | MATERIALS | REMARKS |
|---|---|---|---|---|---|---|---|---|
| A2 | 16 | AA7322622 | PRTD CYL D4 L 25 SIMPLEX 1600 | 12 | 0.03 | 0.36 | TYPE PRT D3 AA7322622 | |
| A3 | 15 | — — | BABBIT | — | 3.0 | 3.0 | BABBIT B6 IS:25-1 6-83 GOST 1320-55 | |
| — | 14 | 32404025 1232614 | BLANK FOR 11 WORKING PADS | 1 | 38 | 38 | — BRONZE БРОФ-10-1 МТУ 7-64 | |
| — | 13 | — — | ARYLDITE | — | 0.025 | 0.025 | ARYLDITE ЕФ-2 | |
| — | 12 | — — | SOLDER | — | 0.08 | 0.08 | SOLDER S-30 IS: 193-56 ПОС30 GOST 1499-54 | |
| A2 | 11 | — — | TEFLON SLEEVE I.D=3 ~~4A~~ @ O.D.=4 | 0.4M | 0.004 | 0.004 | ~~PS 0503.414 PTFET-3 MTT6-05-002/64~~ @ | |
| A2 | 10 | — — | TEFLON SLEEVE @ ~~4A 6~~ ID=6, O.D=8 | 1M | 0.01 | 0.01 | PS 0503.414 PTFET-3 MTT6-05-002/64 | |
| B4 | 9 | — — | TEFLON INSULATED FLEXIBLE COPPER CONDUCTOR S=0.35 mm² | 30M | 0.24 | 0.24 | — МГТФЛ | |
| B4 | 8 | — — | GLASS TAPE | 3M | 0.02 | 0.02 | GLASS TAPE 0.2X25 0503.802 GOST 4514-48 | |
| B4 | 7 | — — | METALLIC SLEEVE П 10/16 | 1.4M | 0.9 | 0.9 | — TY124 | |
| A2 | 6 | — TMC-148 | COPPER RESISTANCE THERMOMETER TYPE CRT-02 PS: 0563.001 | 12 | 0.03 | 0.36 | — Gr. 23 GOST 6651-59 | |
| B4 | 5 | 32404026 ~~1151027~~ @ | FLEXIBLE STEEL CONDUIT ~~FLEXIBLE CONDUIT~~ @ PIPE Dnom 12 | 2 | 4.038 | 0.076 | ~~CARBON STEEL WIRE OCT 5.15.767-64 A-1 GOST 5047-49~~ @ | BS:731-52 TYPE C |
| B1 | 4 | 32404024 1232613 | PROTECTION RING SEGMENT | 6 | 0.034 | 0.204 | DD IS: 513-63 10KП GOST 914-56 | |
| B1 | 3 | 32404023 1216916 | SPECIAL SCREW | 20 | 0.025 | 0.50 | — 25XIMФ GOST 10500-63 KM60-II MT73-65 | |
| B1 | 2 | 32404022 1232612 | THRUST WORKING RING | 1 | 24.38 | 24.38 | STEEL St 42-N IS: 2062-62 MCM3 GOST 500-50 | |
| B2 | 1 | 32404021 1232611 | WORKING PAD | 10 | 3.45 | 34.5 | — BRONZE БРОФ-10-1 МТУ 7-64 | |

| CHG. NOS | DOCU No | SIGN | DATE |
|---|---|---|---|
| 01 | 12 STE-03-F1243 | | 06.11.83 |
| b | 2 STE03-1491 | | 30.4.83 |
| a | 7 STE 77-56 | | 19.4.77 |
| WORKED | P.SINGH | | 25.4.72 |
| CHECKED | P.SINGH | | 19.4.72 |
| SUPERVISED | | | |
| TECH.CONT. | S.C.GOYAL | | 9/6/72 |
| STD CONT | K.S. | | 4/7/72 |
| APPROVED | | | 4/7/72 |

DRN. 26.3.72

C-200-130

THRUST RING WITH WORKING PADS

32404000 SP.

32404020

| LETTER | WEIGHT | SCALE |
|---|---|---|
| - B | 64.98 | 1:2 |

SHEET-1 TOTAL SHEETS-1

HEEP STD

SIZE 24

MF

| | | | |
|---|---|---|---|
| INVENTORY No | SIGN AND DATE | INVENTORY No | SIGN AND DATE |
| 6232610 | 11.03.03-6 | | |